SMART ELECTRO

Stay Cool with SMART ELECTRO



SMART ELECTRO

Smart Electro (M) Sdn Bhd, based in Semenyih, is dedicated to delivering premium solutions in air circulation and cooling. Our product range includes state-of-the-art HVLS permanent magnet ceiling fans, mobile fans, and wall-mounted fans.

With uncompromising standards in **product quality, professional installation, and attentive after-sales service,** we ensure every customer enjoys the very best experience.

Driven by our philosophy — "Technology Leading Sustainability, Innovation Shaping the Future" — We specialize in creating tailor-made ventilation and cooling solutions designed to enhance comfort and efficiency in large-scale spaces.

WHY SMART ELECTRO HVLS FANS?



Premium Quality

Built with **advanced permanent magnet technology** for superior performance and durability.

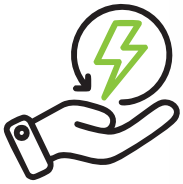

Energy Efficient

Reduce energy consumption while maintaining powerful airflow and cooling.



Custom Solutions

Tailored ventilation and **cooling designs** for large and high-ceiling spaces.



End-to-End Service

From product assurance to installation and after-sales support, we **deliver excellence at every stage.**

HVLS = High-Volume, Low-Speed fans



PERMANENT MAGNET VARIABLE FREQUENCY

FAN SERIES

PERMANENT MAGNET VARIABLE FREQUENCY

FAN SERIES

The system features a **fully enclosed, gearless design that eliminates oil changes and reduces maintenance, achieving true maintenance-free operation.** This greatly extends the lifespan of industrial ceiling fans and ensures a more reliable user experience.

Using rare-earth permanent magnet synchronous direct drive, the fan **effectively controls motor temperature and operates in diverse environments** with an exceptionally long lifespan, saving users significant replacement costs.

KEY VARIABLES

High Efficiency & Energy Saving
IE4 ultra-efficient motor reduces energy use by over 30% when paired with air conditioning.

Maintenance-Free
Fully sealed structure — no oil, seals, or parts replacement needed.

Low Noise
Operates at just 38dB, ideal for noise-sensitive spaces.

Compact & Flexible
Slim design suits low ceilings and tight spaces (installable from 80cm clearance).

Stable & Reliable
Consistent performance with minimal vibration and long-lasting magnetic stability.

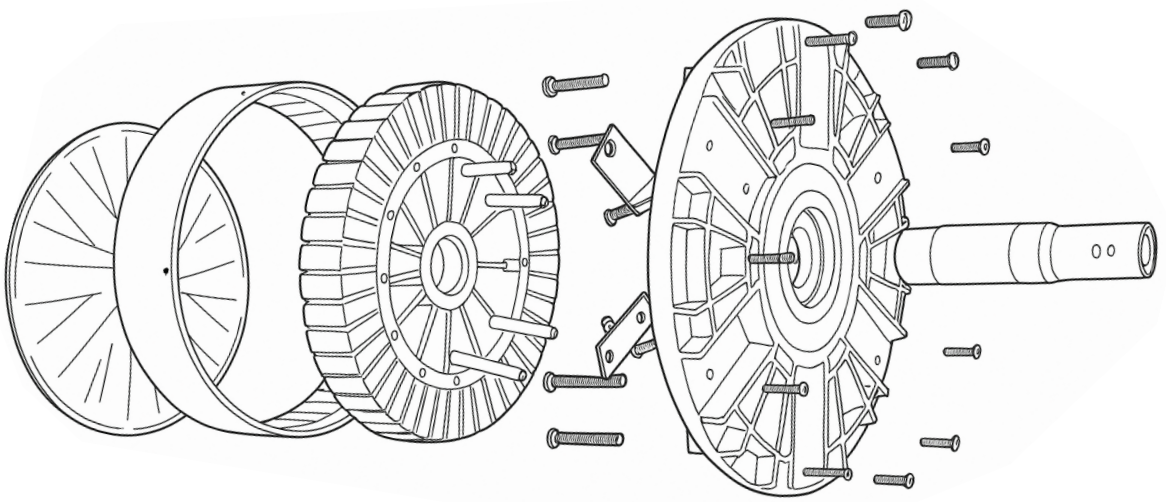

Permanent Magnet Synchronous Motor

Intelligent Control System

Aerofoil Fan Blades

Anti-Swirl Tail Fin

PERMANENT MAGNET SYNCHRONOUS DRIVE MOTOR

IP68-rated motor with ultra-high torque up to **310 N·m**, providing powerful, stable performance — strong enough to drive an electric vehicle.

30% energy saving, meeting **IE4 high-efficiency** and **GB30253-2013 Tier 1** national standards.

Built with **180°C high-temperature copper wire** and a **durable protective casing** for superior strength.

Precision cooling system ensures long-lasting, stable operation and extended lifespan.

Fully sealed, maintenance-free design — no need for oil or seal replacement.

Custom magnetic steel guarantees demagnetization and consistent performance.



INTELLIGENT CONTROL SYSTEM





Experience advanced comfort and efficiency with our intelligent control system — designed to deliver optimal performance with smart precision.

Adjustable Airflow: Multi-speed settings allow flexible airflow control to suit various environments and user preferences.

Smart Temperature Regulation: Automatically adjusts fan speed according to ambient temperature for superior energy efficiency.

Remote Operation: Convenient remote-control functionality enables effortless operation anytime, anywhere.

Safety & Reliability: Built-in fault alarm ensures stable and secure system performance at all times.

Premium Control Module: Crafted with high-quality components for outstanding reliability and long- lasting durability.

AVIATION-GRADE MAGNESIUM-ALUMINIUM ALLOY FAN BLADES

SMART ELECTRO's patented airfoil design **delivers higher airflow**, greater efficiency, and wider coverage.

Made from high-strength AA6063 T6 aviation-grade magnesium-aluminum alloy, offering excellent hardness and corrosion resistance.

Each blade undergoes tensile and fatigue testing, followed by multiple heat treatments to **prevent bending or deformation.**

Internal reinforcement ribs enhance blade strength, prevent drooping, and reduce fatigue on connecting components.

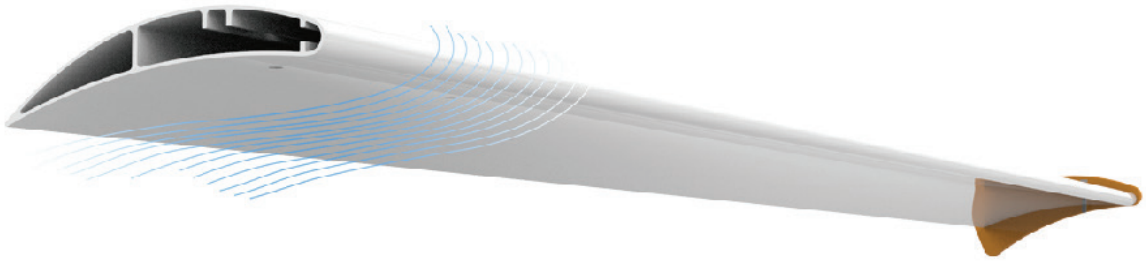

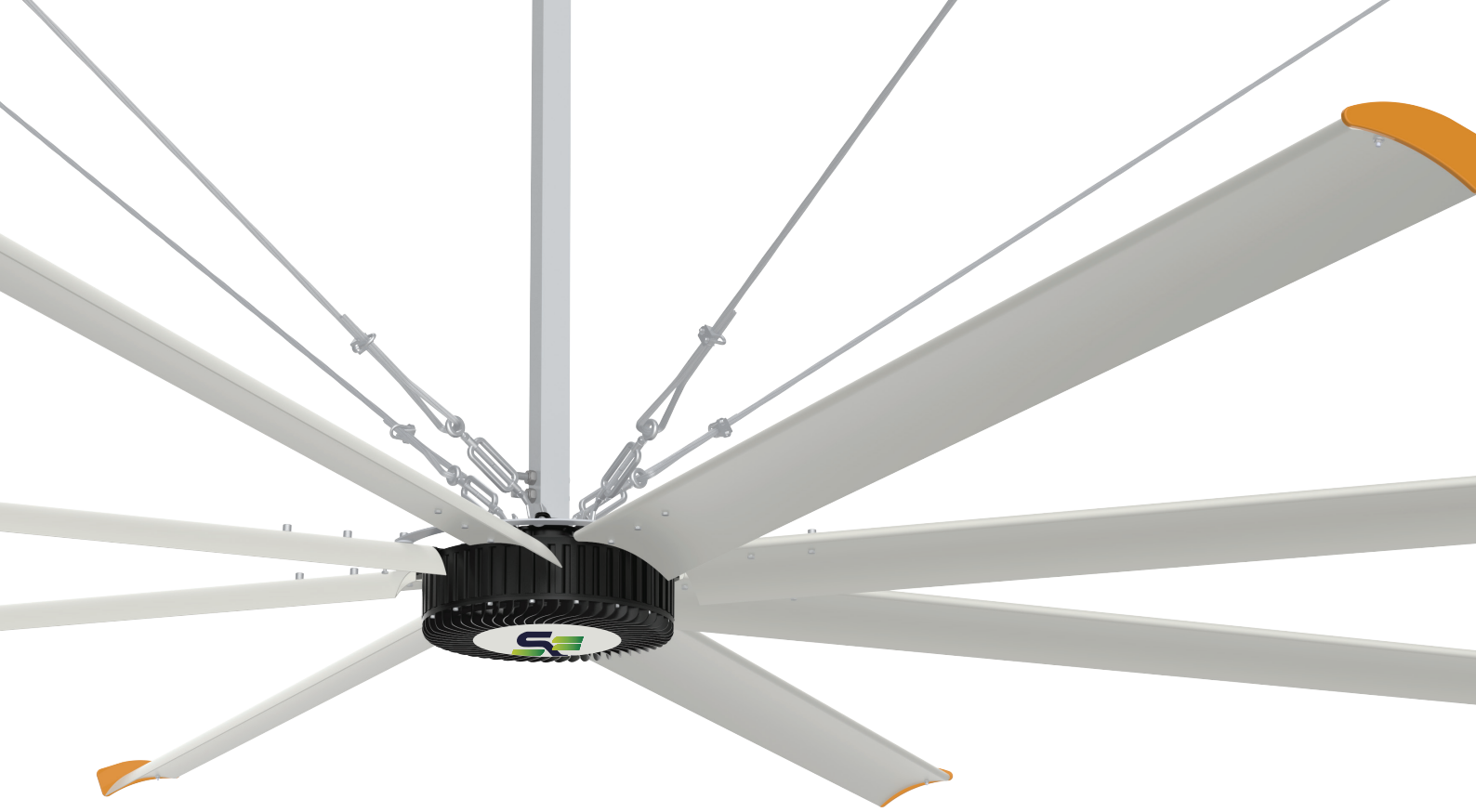

TECHNICAL DATA

MODEL	DIAMETER	PIS	SPEED (RPM)	WEIGHT (KG)	POWER (KW)	CFM (M3/min)	NOISE LEVEL (DBA)	MAXIMUM COVERAGE AREA (M2)	SUITABLE FOR INSTALLATION HEIGHT (M)	BEST INSTALLATION HEIGHT (M)
SE 8.3	7.3M-24FT	8	50	138	1.8	16800	38	1000-1500	6-20	10-16
SE 6.1	6.1M-20FT	8	58	118	1.5	14600	38	700-900	6-16	9-14
SE 5.5	5.5M-18FT	8	60	110	1.2	13600	38	500-700	5-13	8-10
SE 4.9	4.9M-16FT	8	68	103	1.2	11500	38	330-400	5-9	6-7
SE 4.2	4.2M-14FT	8	73	65	0.75	7800	38	100-200	4-7	5-6
SE 3.8	3.8M-13FT	8	80	48	0.75	6300	38	100-150	3-6	4-5
SE 3.3	3.3M-11FT	8	83	45	0.6	5800	38	100-120	3-7	4-5
SE 3.0	3.0M-10FT	8	95	42	0.6	5200	38	90-100	3-5	4-5
SE 2.4	2.4M-8FT	8	110	39	0.5	4100	38	60-80	3-5	3-4

INSTALLATION REQUIREMENTS



Building Structure

Applicable structures: H-beam, I-beam, steel square beam, reinforced concrete beam, circular steel structure, spherical column structure, etc.



Building Height

The total building height **must be greater than 3.5 m.**

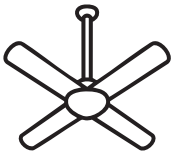

Clearance Requirements

Minimum distance between fan blade and roof: ≥ 0.4 m
Minimum safe distance between fan blade and obstacles: ≥ 0.5 m
Minimum horizontal clearance from both sides: ≥ 0.2 m
Minimum vertical clearance from ceiling mounting point: ≥ 0.6 m



Power Supply

Input voltage options: 220V / 380V

CASE PRESENTATION







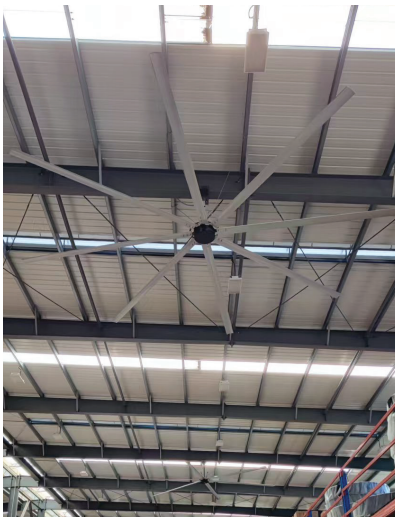





MOBILE INDUSTRIAL

LARGE FANS

MOBILE INDUSTRIAL
LARGE FANS

This **Mobile Industrial Large Fan** is built to enhance comfort in large spaces. It features a **high-efficiency, energy-saving permanent magnet outer-rotor motor** with variable speed control. Compact, quiet, and easy to move, it combines powerful airflow with low energy use.

With an **air delivery distance of up to 30 meters, the 220V brushless DC motor** ensures strong wind performance and efficient power consumption. The stepless speed control allows precise airflow adjustment.

Perfect for factories, warehouses, workshops, farms, construction sites, stadiums, exhibitions, waiting areas, outdoor events, and other large ventilated spaces.

KEY VARIABLES

Easy to Use
Plug and play — no installation required. Equipped with four caster wheels with brakes for smooth and stable mobility.

Maintenance-Free
Fully sealed design, eliminating the need to replace oil or mechanical parts — reducing maintenance costs.

Long-Lasting & Energy-Saving
The Permanent Magnet Synchronous Motor (PMSM) saves up to 30% energy, meets the IE4 high-efficiency standard, and complies with China's Level 1 national energy rating.

Super Quiet
Operates at just 38 dB, delivering a comfortable breeze with minimal noise.

Durable & Reliable
The motor can withstand up to 120°C without demagnetization. CNC-engineered blades ensure superior strength and flexibility, while capacitors last up to 32,000 hours, providing dependable performance even in demanding environments.

PERMANENT MAGNET
SYNCHRONOUS DRIVE MOTOR

IP68-rated motor with ultra-high torque up to **310 N·m**, providing powerful, stable performance — strong enough to drive an electric vehicle.

30% energy saving, meeting **IE4 high-efficiency** and **GB30253-2013 Tier 1** national standards.

Built with **180°C high-temperature copper wire** and a **durable protective casing** for superior strength.

Precision cooling system ensures long-lasting, stable operation and extended lifespan.

Fully sealed, maintenance-free design — no need for oil or seal replacement.

Custom magnetic steel guarantees demagnetization and consistent performance.



INTELLIGENT
CONTROL SYSTEM



Experience advanced comfort and efficiency with our intelligent control system — designed to deliver optimal performance with smart precision.

Adjustable Airflow: Multi-speed settings allow flexible airflow control to suit various environments and user preferences.

Smart Temperature Regulation: Automatically adjusts fan speed according to ambient temperature for superior energy efficiency.

Remote Operation: Convenient remote-control functionality enables effortless operation anytime, anywhere.

Safety & Reliability: Built-in fault alarm ensures stable and secure system performance at all times.

Premium Control Module: Crafted with high-quality components for outstanding reliability and long- lasting durability.



AVIATION-GRADE MAGNESIUM-ALUMINIUM ALLOY FAN BLADES

SMART ELECTRO's patented airfoil design **delivers higher airflow**, greater efficiency, and wider coverage.

Made from high-strength AA6063 T6 aviation-grade magnesium-aluminum alloy, offering excellent hardness and corrosion resistance.

Each blade undergoes tensile and fatigue testing, followed by multiple heat treatments to **prevent bending or deformation.**

Internal reinforcement ribs enhance blade strength, prevent drooping, and reduce fatigue on connecting components.

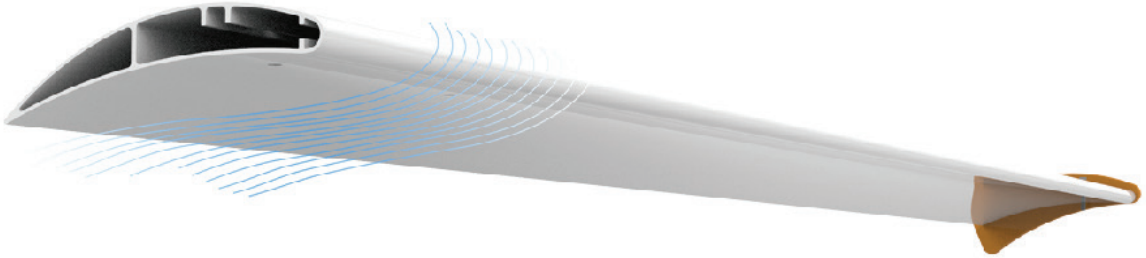

AIRFLOW DISTANCE

The shaded area represents the cooling range, which can reach up to 100 ft (30 m). Wind speed varies across each zone. The shaded parts indicate the fan's cooling area — the darker the shade, the higher the wind speed.

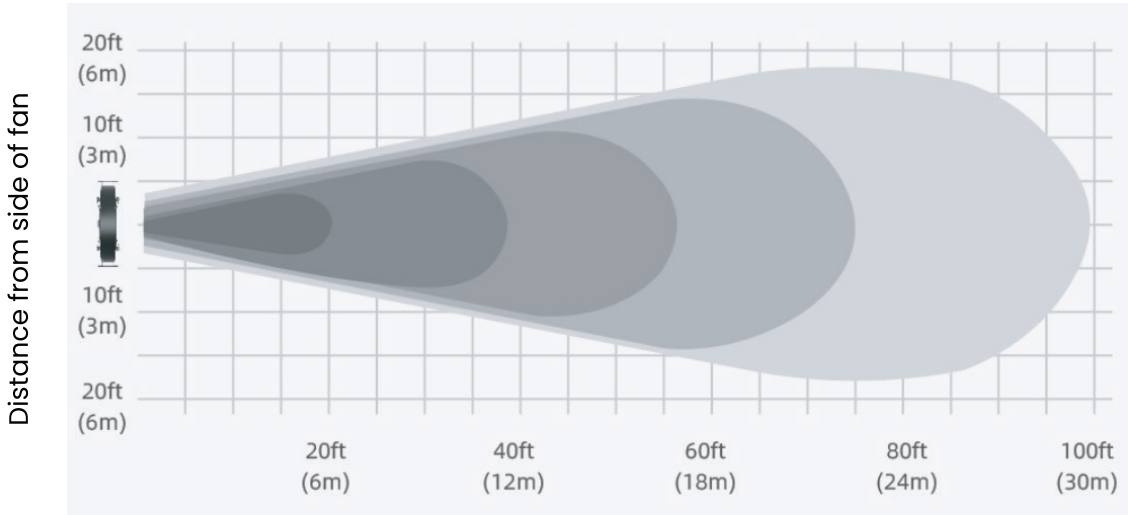

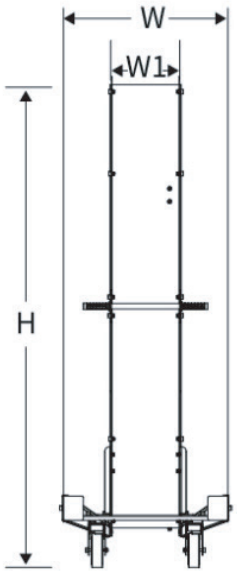

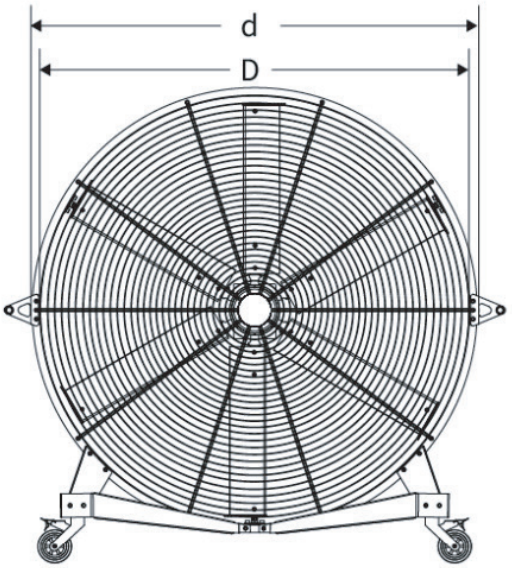

TECHNICAL DATA

Product Model	Fan Diameter	Motor Power	Blades	Speed	Noise Level	Voltage	Weight
SEF-20	2m(7ft)	0.65kw	5/6	0-230rpm	38db	220V	115kg
SEF-15	1.5m(5ft)	0.55kw	5/6	0-300rpm	38db	220V	92kg
SEF-12	1.2m(4ft)	0.40kw	5/6	0-380rpm	38db	220V	80kg
SEF-09	0.9m(3ft)	0.35kw	5/6	0-420rpm	38db	220V	65kg

FAN DIMENSIONS

Product Model	ASF-20	ASF-15	ASF-12	ASF-09
H-Overall Height (mm)	2100	1700	1400	1100
D-Air Outlet Inner Diameter (mm)	1915	1540	1240	930
d-Air Outlet Outer Diameter (mm)	1985	1610	1310	1000
W-Unit Width (mm)	720	720	640	640
W1-Duct Depth (mm)	300	300	300	300

CASE PRESENTATION









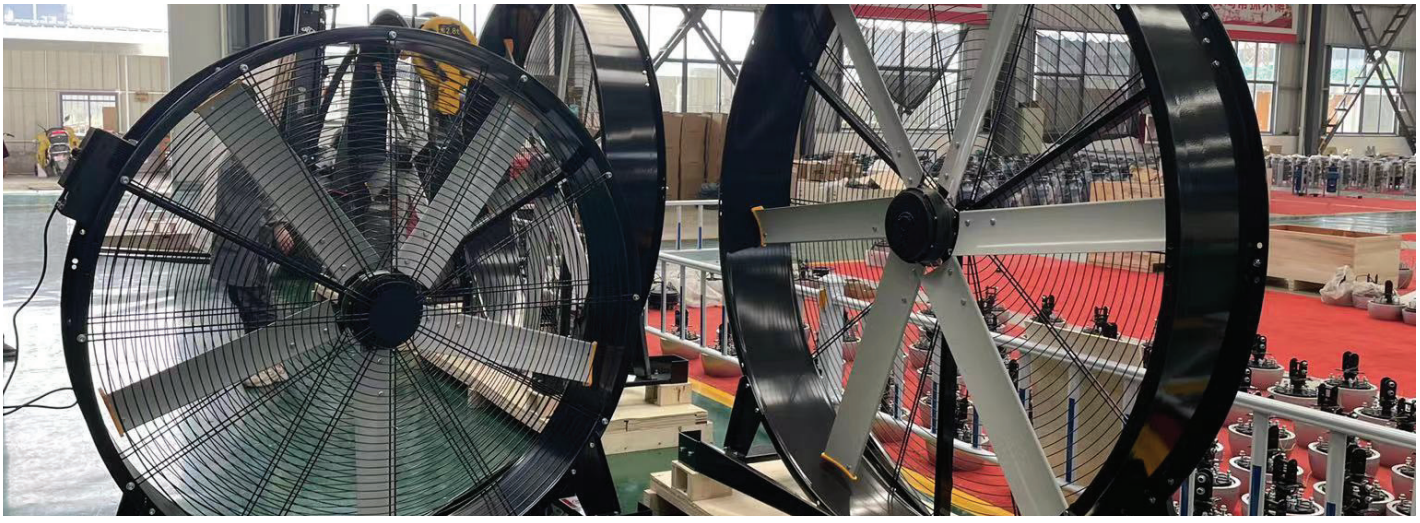



WALL-MOUNTED
INDUSTRIAL FANS

WALL-MOUNTED
INDUSTRIAL FANS

The **Wall-Mounted Industrial Fan,** is a high-airflow wall-mounted fan designed specifically for complex environments where ceiling installation is not suitable. It is **ideal for locations where structural, load-bearing, or overhead vehicle movement constraints** make ceiling fan installation impractical.

With a maximum diameter of 2 meters, the fan **can be directed according to on-site requirements.** Its blades are driven by a PMSM (Permanent Magnet Synchronous Motor), delivering strong and stable airflow. During hot summer days, the ABF series can **provide a cooling effect equivalent to more than 20 small fans**, making it suitable for most complex environments.

PRODUCT ADVANTAGES



Energy-saving & Low Consumption



High Efficiency



Large Airflow



Flexible Installation



Maintenance Free Design



Long Distance Air Delivery

AIRFLOW DISTANCE

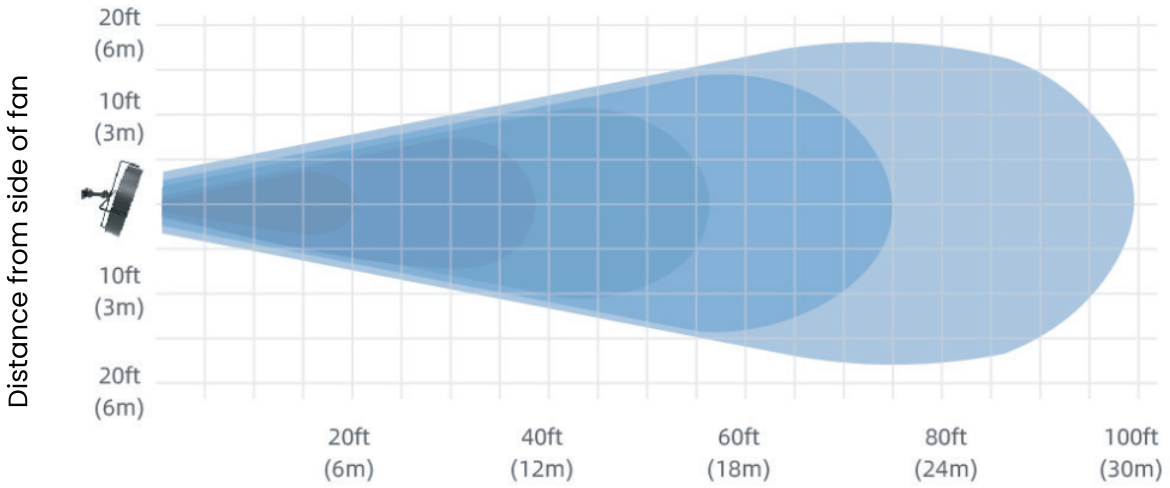

PERMANENT MAGNET
SYNCHRONOUS DRIVE MOTOR

IP68-rated motor with ultra-high torque up to **310 N·m**, providing powerful, stable performance — strong enough to drive an electric vehicle.

30% energy saving, meeting **IE4 high-efficiency** and **GB30253-2013 Tier 1** national standards.

Built with **180°C high-temperature copper wire** and a **durable protective casing** for superior strength.

Precision cooling system ensures long-lasting, stable operation and extended lifespan.

Fully sealed, maintenance-free design — no need for oil or seal replacement.

Custom magnetic steel guarantees demagnetization and consistent performance.



INTELLIGENT CONTROL SYSTEM



Experience advanced comfort and efficiency with our intelligent control system — designed to deliver optimal performance with smart precision.

Adjustable Airflow: Multi-speed settings allow flexible airflow control to suit various environments and user preferences.

Smart Temperature Regulation: Automatically adjusts fan speed according to ambient temperature for superior energy efficiency.

Remote Operation: Convenient remote-control functionality enables effortless operation anytime, anywhere.

Safety & Reliability: Built-in fault alarm ensures stable and secure system performance at all times.

Premium Control Module: Crafted with high-quality components for outstanding reliability and long- lasting durability.

AVIATION-GRADE MAGNESIUM-ALUMINIUM ALLOY FAN BLADES

SMART ELECTRO's patented airfoil design **delivers higher airflow**, greater efficiency, and wider coverage.

Made from high-strength AA6063 T6 aviation-grade magnesium-aluminum alloy, offering excellent hardness and corrosion resistance.

Each blade undergoes tensile and fatigue testing, followed by multiple heat treatments to **prevent bending or deformation.**

Internal reinforcement ribs enhance blade strength, prevent drooping, and reduce fatigue on connecting components.

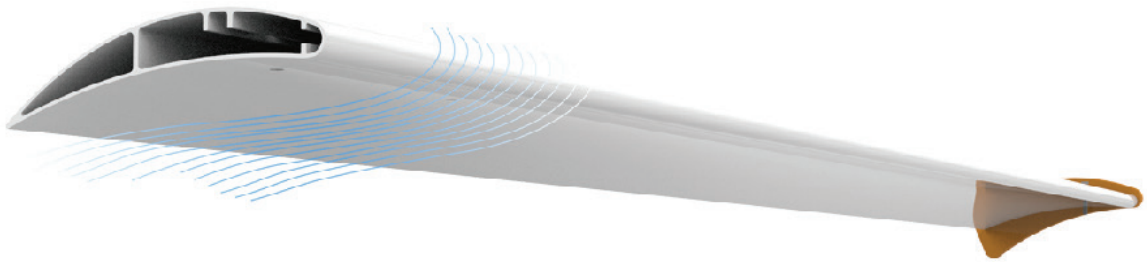





PRODUCT DIMENSIONS

Product Model	Fan Diameter	Fan Duct Depth	Mounting Distance
WMF-20	1985mm	300mm	790mm
WMF-15	1610mm	300mm	790mm
WMF-12	1310mm	300mm	790mm

TECHNICAL DATA

Product Model	Fan Diameter	Motor Power	Blades	Speed	Noise Level	Voltage	Weight
WMF-20	2m(7ft)	0.65kw	5/6	0-230rpm	38db	220V	115kg
WMF-15	1.5m(5ft)	0.55kw	5/6	0-300rpm	38db	220V	92kg
WMF-12	1.2m(4ft)	0.40kw	5/6	0-380rpm	38db	220V	80kg

SMART ELECTRO

Stay Cool with SMART ELECTRO



016-8079690

Smart Electro (M) Sdn Bhd

enquiry@smartelectro.com.my

www.smartelectro.com.my

Lot 24088, Jalan Bangi, Batu 1 1/2,
43500 Semenyih, Selangor

Operation Hours

Monday-Friday : 9:00am - 5:30pm
Saturday: 9:00am - 12:30pm
Sunday & PH: Closed